March 26, 2014

User manual

Ocean Enviro 1, 7

H14130 V42017-1

MANUFACTORER: SEPRO
CUSTOMER: EIVA

SERIEAL No: H14130 V42017-1

NUMBER IN SERIES: 1#2

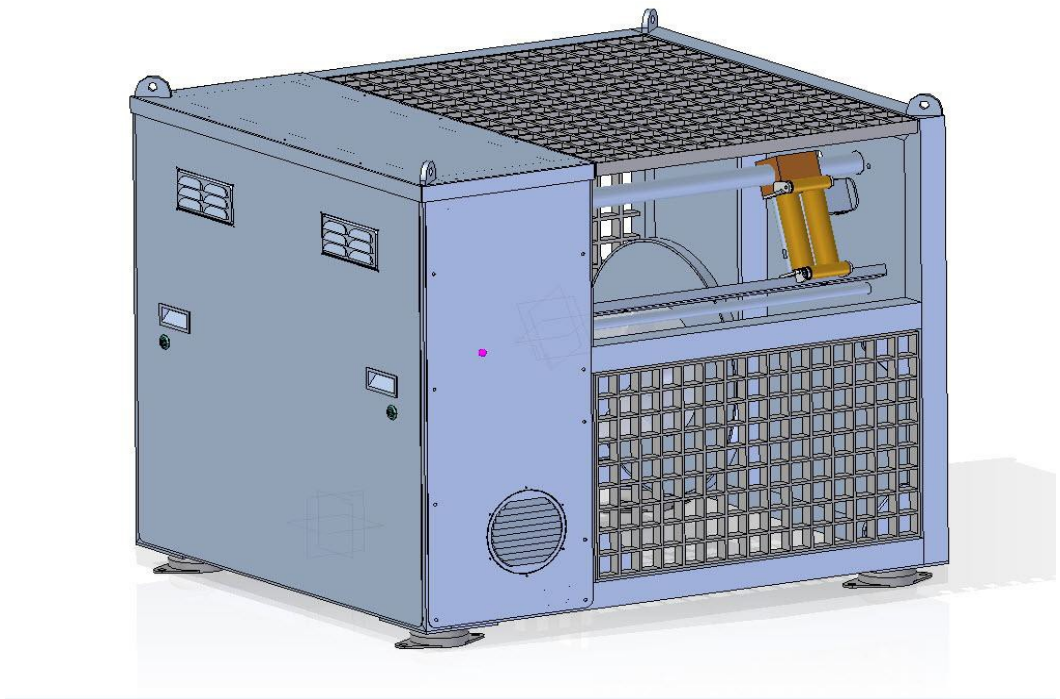

Contents

3.1 Contact Information 5
3.1.1 Sepro & SH-Group 5
3.1.2 End user 6
3.2 Main data sheet 7
3.2.1 Overview 8
3.3 Restrictions 10
3.3.1 Use of the winch 10
3.3.2 Requirements for the operator 10
3.3.3 Requirements for other 10
3.4 Safety 11
3.4.1 General safety instructions 12
3.4.2 General working safety instructions 14
3.4.3 General maintenance safety instructions 15
3.5 Description of product 16
3.5.1 Local mode 16
3.5.2 Remote mode 16
3.5.3 Level wind 17
3.6 Installation 18
3.6.1 Pre-check 18
3.6.2 Lifting 19
3.6.3 Physical installation of winch 21
3.6.4 Connections 23
3.6.4.1 External connections (electrical) 23
3.7 Operation 24
3.7.1 Control panels 25

3.7.1.1 Main control cabinet 25
3.7.1.2 Remote control station 27
3.7.2 Start-up procedure 28
3.7.3 Start up after long term storage 29
3.7.3.1 Mechanical instructions 29
3.7.4 Winch control manual 30
3.7.4.1 Operating buttons and panel 30
3.7.5 Local control 30
3.7.5.1 Buttons 30
3.7.6 Remote control 31
3.7.6.1 Using panel and joystick 31
3.7.6.2 Entering values 31
3.7.6.3 Help 31
3.7.6.4 Password 31
3.7.7 Access control 32
3.7.8 Setting pages 32
3.7.9 Panel settings 32
3.7.10 Cable data 33
3.7.11 Operation main pages 34
3.7.11.1 Normal operation and view 34
3.7.11.2 Stop full unwinding 34
3.7.11.3 Start/stop and mode 35
3.7.12 Description of operating modes: 36
3.7.13 Constant tension 36
3.7.14 View of inputs and outputs 37
3.7.15 Level wind pages 37
3.7.15.1 Level wind 37
3.7.15.2 Level wind offset settings 38
3.7.16 Level wind start point 39
3.8 Maintenance 40
3.8.1 Planed Preventive Maintenance 41
3.8.1.1 Oil level control in main drive gears and gear for level wind. 42

3.8.1.2 Replacement of gear oil 44
3.8.1.3 Grease point 45
3.8.1.4 Check of brake systems 46
3.8.1.5 Brake resistor 46
3.8.1.6 Disconnect wires 46

3.9 Alarms 47

3.9.1 List 47

3.9.2 Saved alarms 47

3.9.2.1 List of alarms 48
3.9.2.2 Warnings 49

3.10 Demobilize and long term storage 50

3.10.1 Electrical equipment 50

3.10.2 Mechanical equipment 51

3.11 DISPOSAL 52

3.12 Material safety data sheets 53

3.1 CONTACT INFORMATION

3.1.1 Sepro & SH-Group

While working with the machine, questions might occur. In such situations, do not hesitate to contact us. The information below is valid per 12/03-2014. If you have any suggestions or changes to this documentation, please let us know. This is done by sending the information to the main office, including the specific serial number (H14130 V42017-1).

Main Office

SH Group	
Kuopiovej 20 DK- 5700 Svendborg	Tel: +45 62 21 78 10 Mail: SH@SHgroup.dk Web: www.SHgroup.dk

Sepro Technology AS	
Strandgata 147 NO-4307 Sandnes	Tel: +47 51 71 58 00 Mail: post@seprotechnology.com Web: www.seprotechnology.com

24 hr. service

SH Group	
Kuopiovej 20 DK- 5700 Svendborg	Tel: +45 20 91 78 10 Web: www.SHgroup.dk

3.1.2 End user

SH Group is continuously improving our customer service to our customers. Therefore, we kindly ask you to fill out a copy of this sheet and return it. The data will be used if SH Group needs to reach the specific operator with important product information. If the situation changes it is important, that SH Group is in possession of the latest information.

Name: _____

Address: _____

_____

_____

_____

Phone: _____

Mail: _____

Please email the copy to either SH@SHgroup.dk or mail to SH-group, Kuopiovej 20, DK-5700 Svendborg

3.2 MAIN DATA SHEET

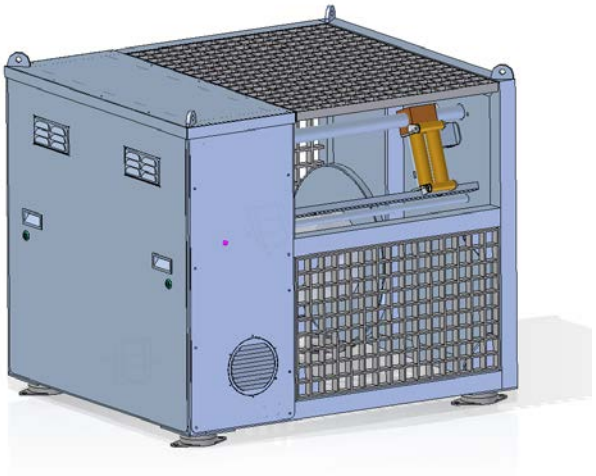

Type: Ocean Enviro 1, 7

Winch number:		H14130 V42017-1
Performance:	Line pull 1 layer	2,5 KN.
	Speed 1 layer @ 50Hz	28 m/min
	Speed 1 layer @ 60Hz	32 m /min
Overall Dimension:	Width.	1050 mm
	Depth.	910 mm
	Height.	850 mm
Drum:	Dia.	250 mm
	Flange dia.	475 mm
	Length.	443 mm
Weight approx.:		285 kg.

3.2.1 Overview

Winch seen from umbilical outlet side.

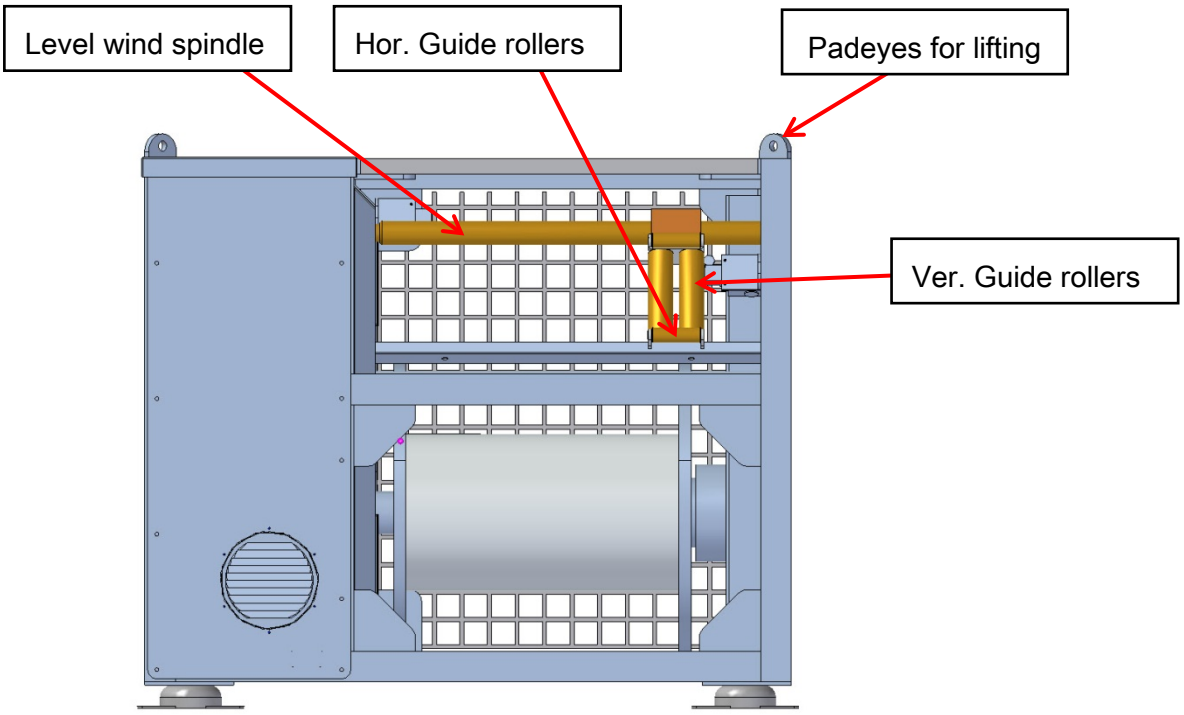

Winch seen from left side.

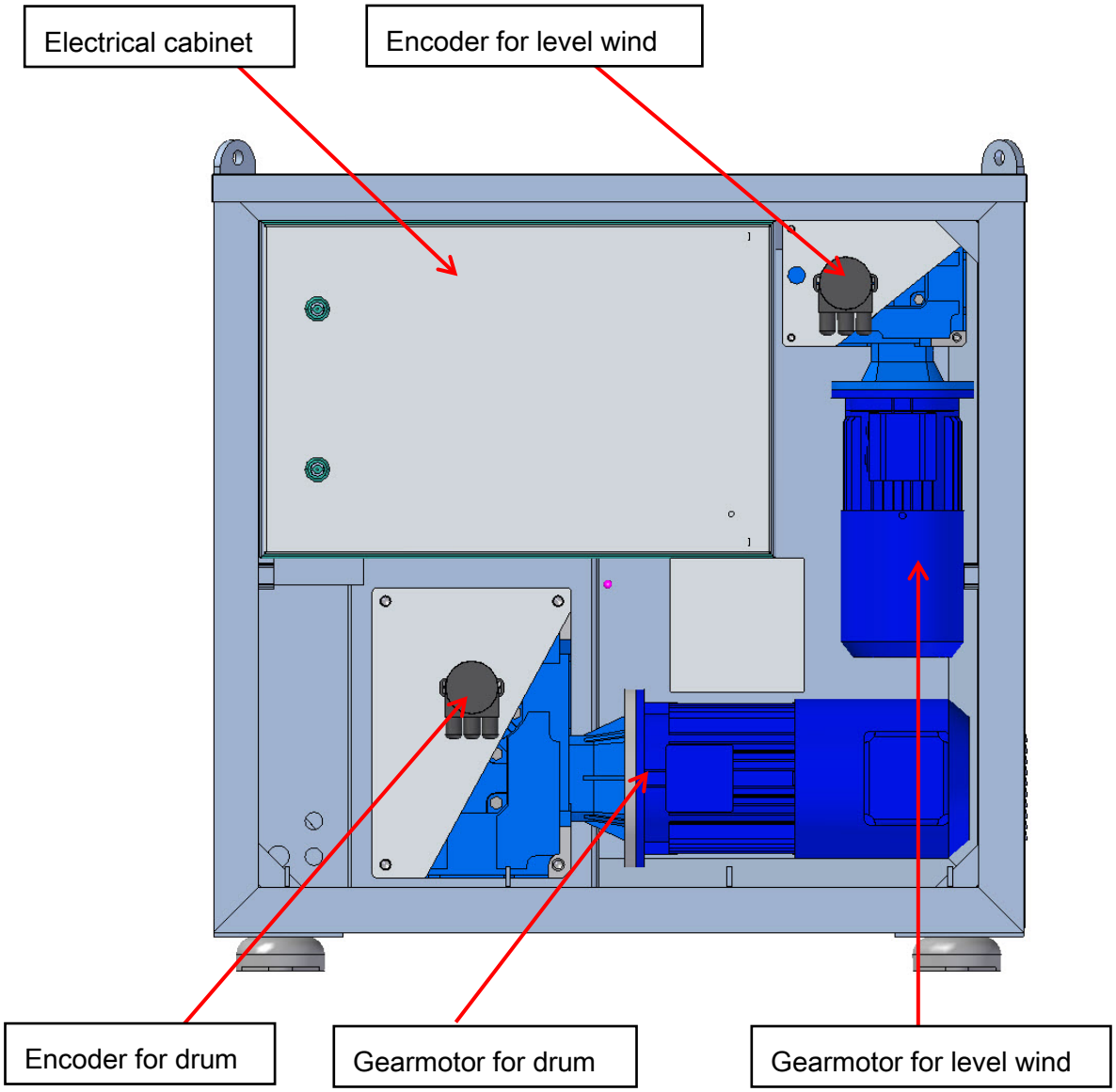

3.3 RESTRICTIONS

WARNING

Following restrictions must be read carefully and confirmed.

3.3.1 Use of the winch

The winch must not be subjected to performances exceeding those of section 3.2
Any kind of constructive changes to the winch cannot be accepted without the manufacturer´s consent.
This applies to the entire structure including mechanical, hydraulic and electrical components. With any avoidance from above, SH Group disclaims responsibility for the functionality and safety of the winch, as it may no longer meet the applicable directives. To maintain the warranty for the full warranty period, parts needs to be replaced with OEM equipment, specified in this documentation or specified by SH Group.

3.3.2 Requirements for the operator

The operator must read this manual thoroughly before using the winch and furthermore be trained in handling the winch. As an option SH Group offers a training program if this is needed. Use the information´s in the section 3.1 to get in contact with SH Group.

3.3.3 Requirements for other

Service installers performing repairs and service on the winch has to read relevant sections in this manual, see section “3.8 Maintenance”. Cleaning staff or similar should be instructed in how cleaning can be done safely.

3.4 SAFETY

The winch can by negligently or recklessly use, be dangerous to the operator or any person situated in the operating area. Therefore, only trained personnel should operate the winch. Before any work with or on the winch, the User Manual must be read as occupational accidents or damage to the winch can be avoided.
Throughout the document some points are important to notice, to ensure the safety while working with the winch. These will be marked as follows:

For points that needs extra attention.
This sign will appear in the manual when the result of not following the instructions might cause a material damage or be dangerous to the operator as well. This sign requires the fully attention for both operator and people situated in the working area.

For points that might develop into a dangerous situation.
This sign will appear in the manual when the result of not following the instructions might cause seriously injury or death to the operator or people situated in the working area. This sign requires the fully attention for both operator and people situated in the working area.

It is required that regulatory authorities, the operator and every person, situated in the operating area, are familiarized with the contents of the User Manual, especially the safety regulations. The information you find in the User Manual is only for orientation and will not be functional as a fully instruction in general mechanical and electrical understanding. The purpose of this book is to assist the user during installation, operation, maintenance, de-installation and preservation.

3.4.1 General safety instructions

- Use the emergency stops if an emergency situation occurs and the winch needs to be stopped immediately
  - All personnel should be instructed in how the emergency stops are operated and where they are located. The pictures below, illustrates locations. When the hazard is removed, the emergency stop can be reset by pressing the blue button/lamp located besides the emergency stop on main cabinet.

Electrical cabinet located on winch

Remote control

WARNING

- Electro-magnetic fields

  - Any person who has a heart pace-maker or implant may not under any circumstances come in the vicinity of electro-magnetic brakes. The strong electro-magnetic fields constitute a mortal danger for such persons!
- Entrapment Hazard

  - The winch is equipped with moving functions where one element is moving towards another. In those places, entrapment hazards may occur. When the winch is working, no person must operate in front of the winch! Keep away from all moving parts.
- Harmful oil and chemicals

  - The different chemicals used in the winch, may in contact with the skin be harmful to the health. For service and repair, it is required to use gloves. See Safety sheets for correct handling. You will find the sheets in the last part of this manual.

Heavy Lifting

- It is recommended to use safety shoes when working with the winch. Lifting equipment should be used if loads exceed 30kg.

3.4.2 General working safety instructions

Following instructions serves to prevent accidents when operating or servicing the winch. The company should always consider the safety regulations for the operator, winch and entire staff included in the daily work with the winch.

IMPORTANT

- The winch must only be operated by trained staff
- It is highly recommended that besides the operator, an observing person is present at all time.
- The winch must be operated as prescribed in the “User Manual” section 3.7
- Use the winch in the softest operation possible, this prolongs lifetime for the components and increases safety
- Keep the winch in good condition and be aware of any noises that might indicate that a malfunction is under development.
- Always make sure that the operator has full overview of the working area.
- The winch is to be connected to the ship acoustic and visual warning system.

3.4.3 General maintenance safety instructions

IMPORTANT

- Service and maintenance should only be performed by trained personnel.
- Only a qualified electrician or trained personnel should maintain or be responsible for repairs to the electrical parts of the winch!
- Only a qualified hydraulic engineer or trained personnel should maintain, or perform repairs on the hydraulic parts of the winch!
- Only trained personnel should maintain, or perform repairs on the mechanical parts of the winch!
- Use OEM spares, no guarantee is granted if others are used.
- Keep the winch in good condition.
- When disassembling hydraulic cylinders, hoses, valves etc. high pressure oil spill might occur. This needs special attention!

WARNING

Electrical maintenance and repairs must only be performed with the power switched off.
Use the main breaker to switch power off. It should be ensured, that the power switch is locked while the maintenance is ongoing!

3.5 DESCRIPTION OF PRODUCT

The winch produced on SH reference H14130 V42017-1 is an electric driven winch.
The drum is mounted directly onto a Bevel helical gearbox and is mounted with an electric asynchronous motor, which is controlled by a frequency converter. The motor has a built in electric disc brake. The drive motor has a thermostat to protect the windings. It will trip the motor if winding temperature exceeds 140°C. The motor also has a cooling fan that activates and deactivates as required.
When the winch pays out umbilical, the motor acts as a generator and produces electric power. The power generated by the winch is burned off in the “brake resistor bank”.
During lowering of a load or deceleration, the frequency converter sends the current to the brake resistors, burning off the energy.
The winch has 2 basic working modes on which all functions are based.

1) Local mode
2) Remote mode (option)

3.5.1 Local mode

In local mode, the winch is controlled manually and can only be operate from the main control panel. Use the “Pay In/Out” button to pull the load in or out. Use the “Speed Control” button to adjust the speed of the load.

3.5.2 Remote mode

In remote mode, the winch is operated from the enclosed remote control panel. Use the “Pay In/Out” joystick to lower or raise the load. The joystick has a built in adjustable speed control to control the load.

WARNING

The frequency converter uses 1000Volts. Wait at least 15 minutes before working with electrical parts. (See also data sheet)

3.5.3 Level wind

The winch is equipped with an electrically controlled level wind to aid spooling of the umbilical on the drum.

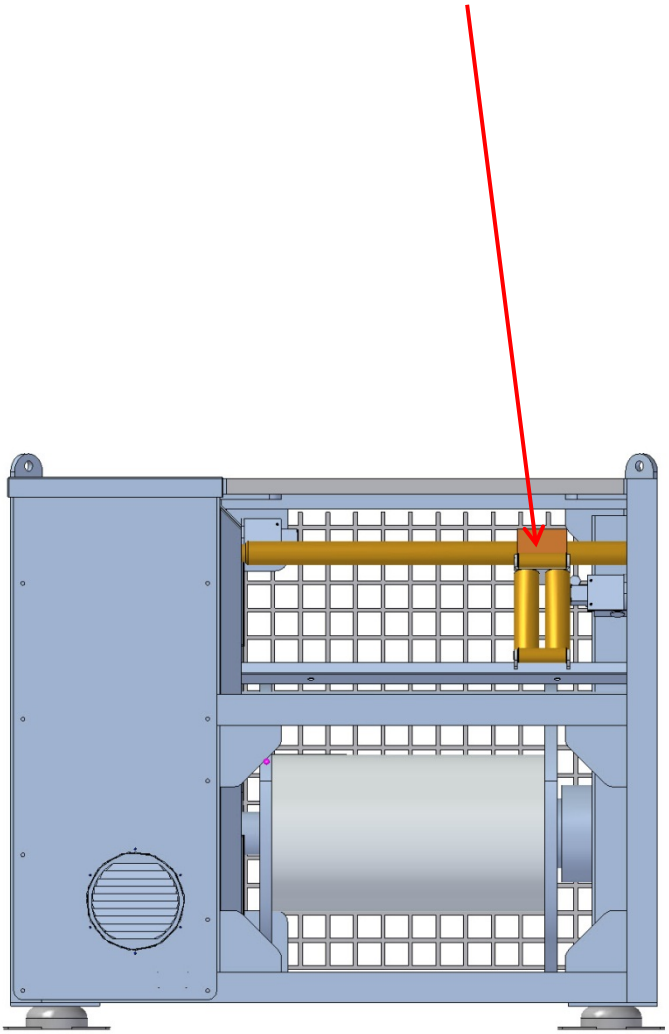

3.6 INSTALLATION

This chapter will guide you through the complete installation of the winch. It handles the physical installation regarding lifting and welding. You will also find information about the different internal/external media connections that will be needed, including the specification requirements. The installation should only be carried out by skilled personal.

Before any installation, the safety instructions in chapter 3.4 “Safety” must be read and followed.

3.6.1 Pre-check

Before any start up, all listed parts below must be present and proper installed according to this chapter. This is to ensure working safety and performances set out in the specification. All parts must be checked for damages caused by transportation or incorrect handling.

Check list		
No.	*Description*	*Checked*
1	Winch, including slip ring and umbilical.	
2	Local control panel.	
3	Remote control panel.	

3.6.2 Lifting

IMPORTANT

When lifting the frame make sure, that the structure is free of all external connections and all lifted parts are safely fastened to the frame.

The winch is ready for lifting, when wire slings are mounted to lifting eyes, shown in pictures below.

Top view

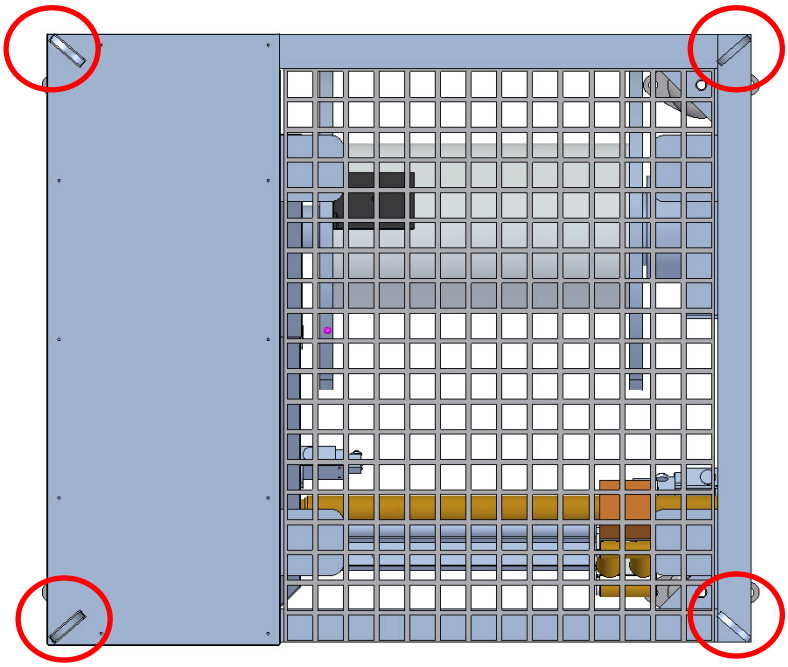

Max Gross: 400 kg.

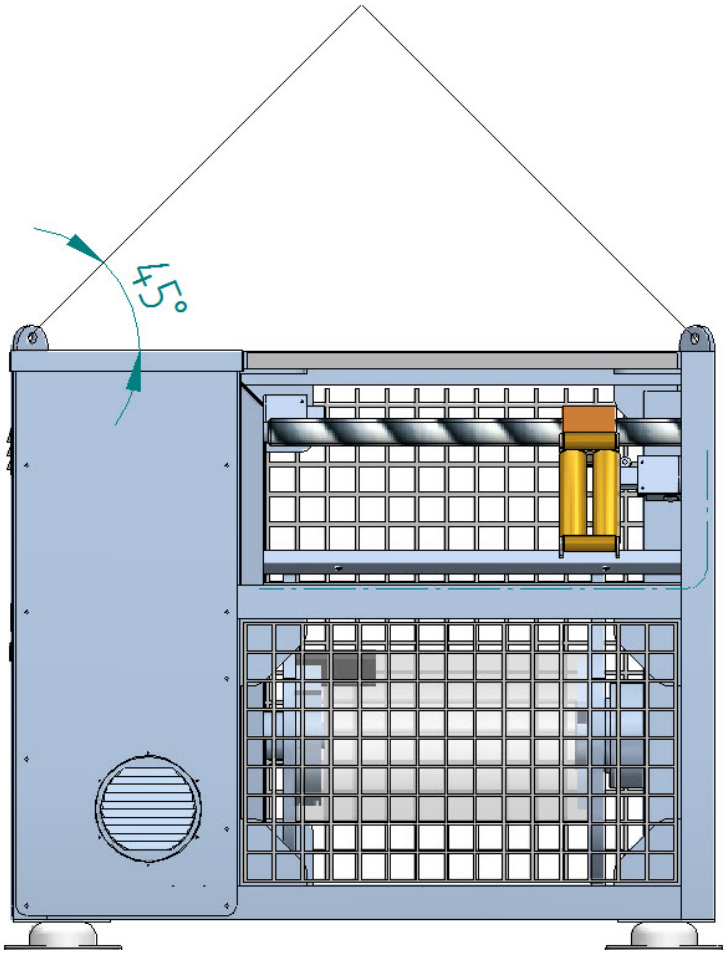

Front view

3.6.3 Physical installation of winch

The winch must be mounted with 8 M12 A4 quality 8.8 bolts to a solid foundation.

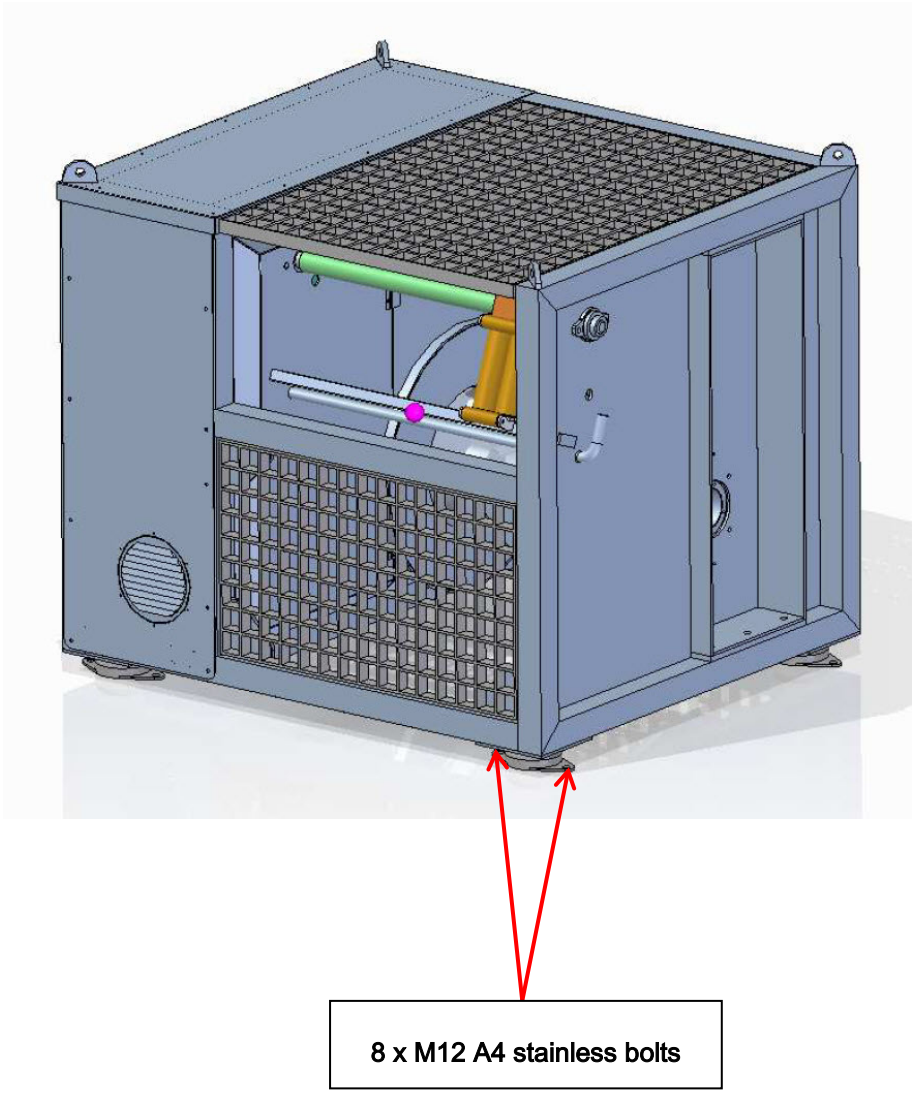

Mounting should only be made by skilled personal.

Afterwards the installation, the procedure below should be carried out.

- **Moving parts**

  - Inspect all moving parts for correct freely operation without any obstructions.

- **Inspection**

  - Do a visual inspection according to section 3.8.1 “Planned preventive maintenance”. Grease if necessary.

3.6.4 Connections

3.6.4.1 External connections (electrical)

The electrical power requirements are:

Voltage: 400 V A/C

Frequency: 50 Hz or (60 Hz)

Please note that the winch is designed for 400 V A/C/50 Hz power supply. If the winch is connected to a 440 V A/C/60 Hz power supply, there will be a 20% increase in speed.

In picture below the connection point can be seen.

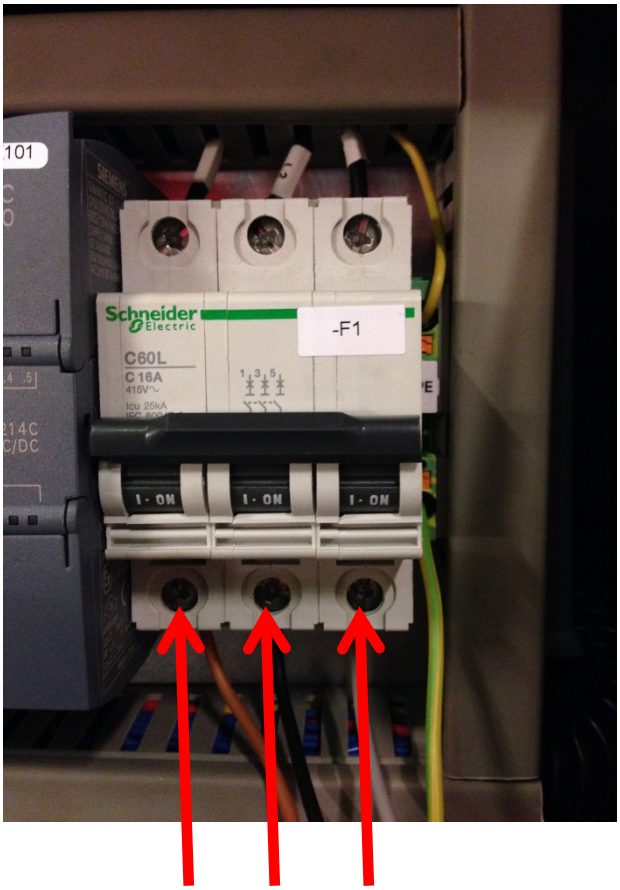

IMPORTANT

Before turning the power on the first time the voltage has to be measured and found correct.

3.7 OPERATION

Use this chapter as a guide in the understanding of handling the winch.

WARNING

Before any use of the winch, the chapter 3.4 “Safety” must be read and followed.

IMPORTANT

Be sure that the daily maintenance has been carried out and the system is ready for operation before any start up. See the section 3.8.1 “Planned preventive maintenance”.

3.7.1 Control panels

3.7.1.1 Main control cabinet

Main control

Table of buttons and lamps

Name	*Illustration*	*Description*
Emergency stop		Push if an emergency situation occurs.
Reset emergency stop		When emergency situation is eliminated, press for resetting the emergency stop. Button lights blue, when emergency stop is activated. When lit, the winch cannot be operated.
Start winch		When you press start, you can operate the winch
Stop Winch		Stop button. When this button is pressed the winch stops, and at the same time the ”standstill heating” system starts to protect the motor and the electric components in the control cabinet against corrosion damage.
Remote/Local		Remote = You can now operate from remote. Local = You can now operate from switchboard.
Pay in/ out		When turning the button you can pay in or pay out. Left pay in / Right pay out
Speed control		Changes the speed for pay in/out.

3.7.1.2 Remote control station

This panel is for the remote control of the winch. The panel contains a joystick for the general control and an emergency button.

The joystick has a variable speed. A gentle push on the joystick starts the winch slowly.

Remote control

3.7.2 Start-up procedure

Before starting the winch, it should be checked that all components from installation procedure in section 3.6 “Installation” are present, properly installed and connected.

1. Check rotation on motors
   - Make sure that the motors are rotating the right way according to marking arrows on cabinets.
2. Inspection of system
   - Make a complete visual inspection according to section 3.8.1 “Planned preventive maintenance”.
3. Switch on the main breaker
4. Check lamp indications on main control cabinet

   a. Reset emergency stop (Press blue button)
   b. Acknowledge alarms on touch screen.

The winch should now be ready for operation.

3.7.3 Start up after long term storage

If the winch has been preserved in accordance with section 3.10, a general clean-up has to be done before starting the winch. Besides the clean-up, the different steps described below have to be done.

3.7.3.1 Mechanical instructions

IMPORTANT

- Remove anti-corrosion agent according to data sheet for the used agent.
- Change gear oil. In the preservation instruction, it is recommended to fill up the gears with oil. The correct functional oil level is when the level reaches the gear center point, when gear is not running.
- Do a complete inspection according to the preventive maintenance.
- Remove old grease and do a new lubrication according to section 3.8.1.3

3.7.4 Winch control manual

3.7.4.1 Operating buttons and panel

This manual is about operation of the winch. For operation of the winch is a local set of buttons and a remote 4” Siemens touch panel in a box. Together with the panel are an emergency button and a joystick. The box is made for carrying around by the use of a belt.

On the winch is the main cabinet with frequency inverters and PLC among other things. At the end of the cabinet are the buttons for local control.

3.7.5 Local control

3.7.5.1 Buttons

In front of the cabinet are buttons for local operation of the winch. Commonly are an emergency stop button and an illuminated blue reset button. Emergency stop must always be reset to be able to operate.

To operate by the buttons the selector must be in position local. Remote is for panel operation. There are buttons for start and stop of the winch. When started the start button is lit. The direction of the winch is selected and the speed is set by a potentiometer. The level wind will operate automatically according to drum movements.

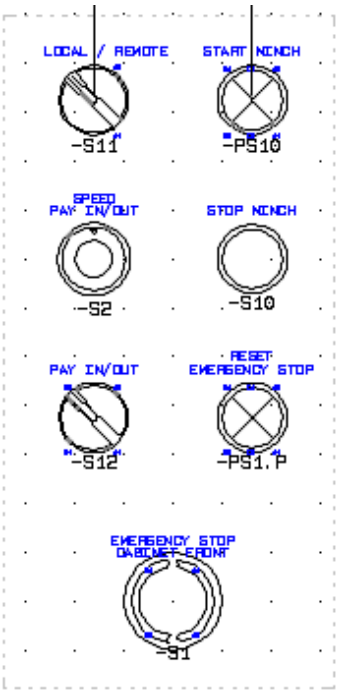

3.7.6 Remote control

3.7.6.1 Using panel and joystick

To use the panel the selector must be in position remote. No control from the panel is possible if in local control.

The panel is a 4” touch panel with 4 buttons below. The buttons are: F1 Page left, F2 Main page, F3 Alarm list and F4 Page right. These are always active. But when for example on the Alarm list page nothing will happen when pressing the F3 button. Except for the alarm pages the top line of the screen is an alarm banner. This shows the latest occurred alarm or warning if there is any.

And to the far right are buttons for selecting pages. These are level wind, contact and settings. The buttons are not on their own page.

3.7.6.2 Entering values

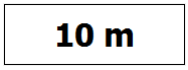

Values that can be adjusted are shown black on white with a black frame. Pressing the number brings up a numerical keyboard for entering values.

3.7.6.3 Help

When there is a question mark button at the bottom right: get help and instructions for the current page.

3.7.6.4 Password

There is a password in three levels indicated when needed in this manual like this:

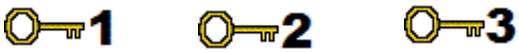

3 is the highest level.

Normally operation does not require password and this is not indicated. In a few cases when it could be expected but is not required it is indicated like this:

3.7.7 Access control

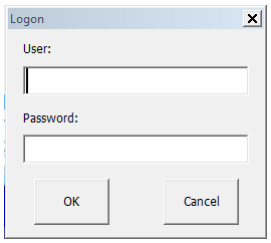

A logon window will appear when trying to do an action you do not currently have the clearance for.
Enter the user name and the corresponding password. On the setting page it is possible to log off when logged in.

3.7.8 Setting pages

Setting pages are selected by the button with a wrench key. They include Settings and Cable data. Shift between them by right and left buttons F1 and F4.

3.7.9 Panel settings

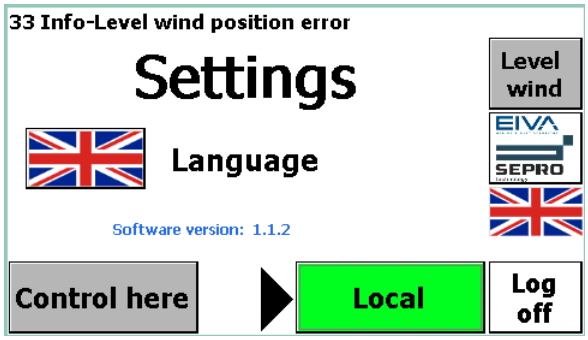

Select language:
Optional, not in this winch.
See the software version.
Here it is shown if control is here or local.
When logged in the log off button is visible and it is possible to log off by pressing it.

3.7.10 Cable data

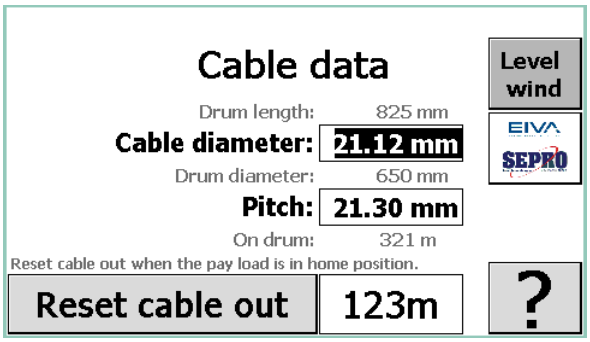

On this page data about the cable and the drum size are shown.

It is possible to adjust the cable size and the pitch. This is the distance between cable rounds. The pitch cannot be less than the cable diameter.

The drum size as length and diameter is shown but cannot be altered.

How much cable is on the drum is also shown and the length of cable out. This last one can be reset to zero when all the cable is on the drum. Or when the load reaches the water surface. It is to be regarded like a trip counter.

Pressing the question mark will provide help and the two other buttons at the right are for getting to the level wind page and the contact page.

3.7.11 Operation main pages

Main pages

Main pages are selected by home button F2. They includes the Main page itself and the I/O page. The latter is only for read out and for service. Shift between them by right and left buttons F1 and F4.

3.7.11.1 Normal operation and view

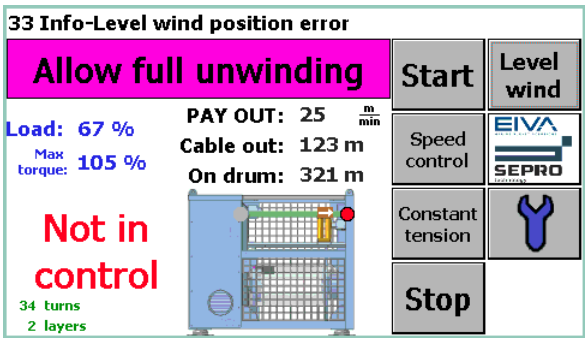

The page shown here is meant to show the various possibilities.

At the bottom middle is a front view of the winch. On this are indications for the level wind end stops and moving direction. Here level wind is shown moving left and left end switch off (red). Note the view is reverse.

Above is the main information about status of operation. Load and maximum torque is to the left. Maximum torque is only visible in Constant tension.

Bottom left is shown turns and layers and whether this panel is not in control.

3.7.11.2 Stop full unwinding

When less than 8 turns is left on the drum unwinding will be stopped. Then the button

to allow full unwinding will be visible, just below the alarm banner at the top. The allowance can be stopped again or it will stop automatically after 3 minutes or when out of the stop unwinding zone (8 turns).

Speed is though always restricted when the cable is near the end either in or out.

3.7.11.3 Start/stop and mode

To the right are buttons for start/stop and mode selection.

Start button	Start	Start is always together with another operation.
Speed control	Speed control	Can always be selected.
Constant tension	Constant tension	Only if conditions are fulfilled.
Stop	Stop	Always possible when started.

For all operating modes buttons this applies about view:

Speed control	Grey text on grey.	Is not selected; cannot be selected.	Either it is not presently allowed or control is local.
Speed control	Black text on grey.	Is not selected; can be selected.	Remote control is selected.
Speed control	Blinking black and white	Ramping in or out.	Wait for ramping to end.
Speed control	Black text on green background.	Active operation mode; can be deselected.	Remote control is selected.
Speed control	Grey text on green background.	Active operation mode; cannot be deselected from here.	Local control is selected.

3.7.12 Description of operating modes:

Speed control

Speed control can always be selected. Full speed and torque are available. Setting can reduce torque and speed can be restricted. Near both ends of the cable speed is restricted. Joystick is controlling the speed.

3.7.13 Constant tension

Constant tension

Constant tension can be selected when there is at least 5 m of wire out. Up to full speed and full torque is allowed. The joystick now adjusts the tension (Max torque) which is visible during this operation.

Should the conditions fail during operation mode automatically changes to speed control.

3.7.14 View of inputs and outputs

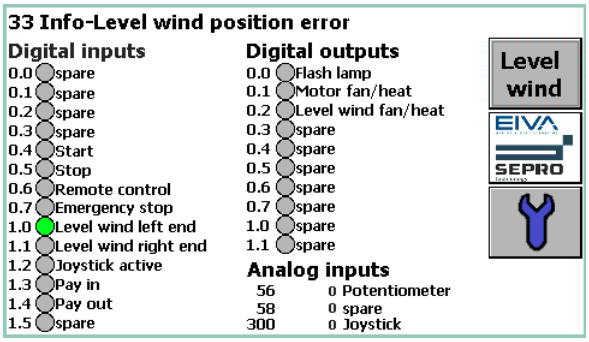

This page shows digital inputs and outputs and analog inputs in the PLC.

This view is for service purpose.

3.7.15 Level wind pages

The level wind pages are for controlling of the level wind and for setting it for automatic operation. It includes 5 pages. These are Level wind; Level winds offset setting, both these with help pages, and finally start point setting. Shift between them by right and left buttons F1 and F4. The help pages are selected by question mark.

3.7.15.1 Level wind

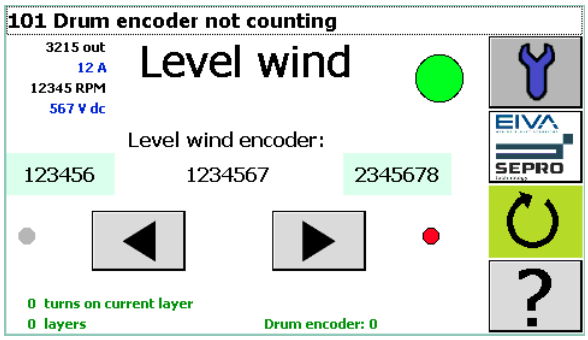

Level wind position is shown in the middle. The end position values can be adjusted by pressing the numbers in each end for 5 seconds when the level wind has been moved to the end.

Switch between automatic operation and manual operation by the mode button.

Status for level wind inverter is shown next to the headline. Legend is on the help page.

Key values for the inverter are also shown.

Drum position is shown at the bottom as encoder value and as layers and turns.

In manual it is possible to run the level wind manually with the two buttons which get visible when manual is selected.

3.7.15.2 Level wind offset settings

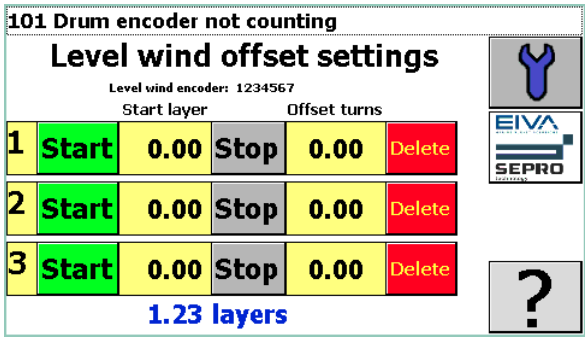

This page allows the operator to set up the offsets necessary for a correct level wind function.

Here all is shown. In normal operation only relevant buttons are visible.

The offsets are to compensate for inaccuracy in the cable and the spooling.

The offsets can be used in any order. Delete is only possible when the cable is in the same layer. Spooling must be stopped. Then the procedure is: press start, go to page level wind and move level wind manually, go to this page and press stop. Delete removes an offset.

When the start layer position is reached the level wind will do the offset turns. This works in both directions.

Note that the units for the 2 columns Start layer and Offset turns are not the same.

3.7.16 Level wind start point

This start point must only be set when a new cable is mounted.

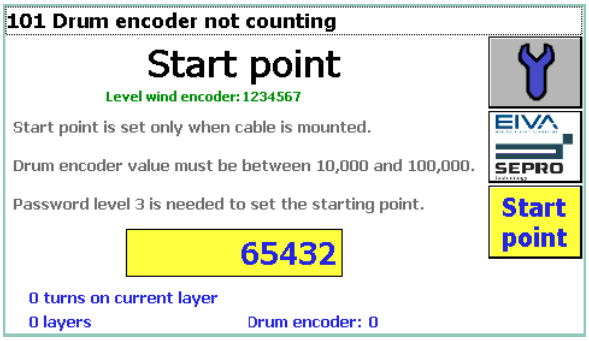

Start point is the starting offset. This is the encoder value when the cable on drum is 0 m.

The encoder value must be less than 100,000 when being set. The button is only visible then. A value around 50,000 is suggested. Too small a value is not desirable.

The button must be pressed for 5 seconds.

Contact information

Name and address of the manufacturers for contact.

3.8 MAINTENANCE

It is essential that the winch is being treated in accordance with this section, to ensure the performance throughout the lifetime of the product. The winch is designed for minimal maintenance. However, due to working conditions, there will always be an ongoing minor maintenance. With this section, the operator is able to perform the daily maintenance.

WARNING

Before any kind of maintenance or inspection, the section 3.4 "Safety" should always be followed.

Dissembling the system has to be done under very clean conditions.
Moreover, it is always a good idea to be aware of abnormal noise from the winch. It will be able to detect a minor fault that usually only is a small matter in the beginning, but which can destroy the entire system, if it is allowed to evolve.
To ensure a long life and reliable system, the winch should be regularly cleaned of impurities.

3.8.1 Planed Preventive Maintenance

This section contains description of the general maintenance procedures. In the end of the section you will find a schedule over the procedures. This eases the overview and guides to a systematic plan of the maintenance. The schedule comes in to identical pages, one master and one for noting dates and signature.

IMPORTANT

It should be noticed that the time intervals only are guidelines and represents the maximum number of hours between services. Depending on the specific use and the local environment, the intervals can be greatly reduced. For the same reason SH Group disclaims any liability for this product. See introduction in front of this manual.
For every 4000 hours the schedule should be completed.

3.8.1.1 Oil level control in main drive gears and gear for level wind.

Correct oil level in all gears must be checked on a daily basis. This is done by visually securing that oil level reaches the gear center point when gears are not running.

Main gear

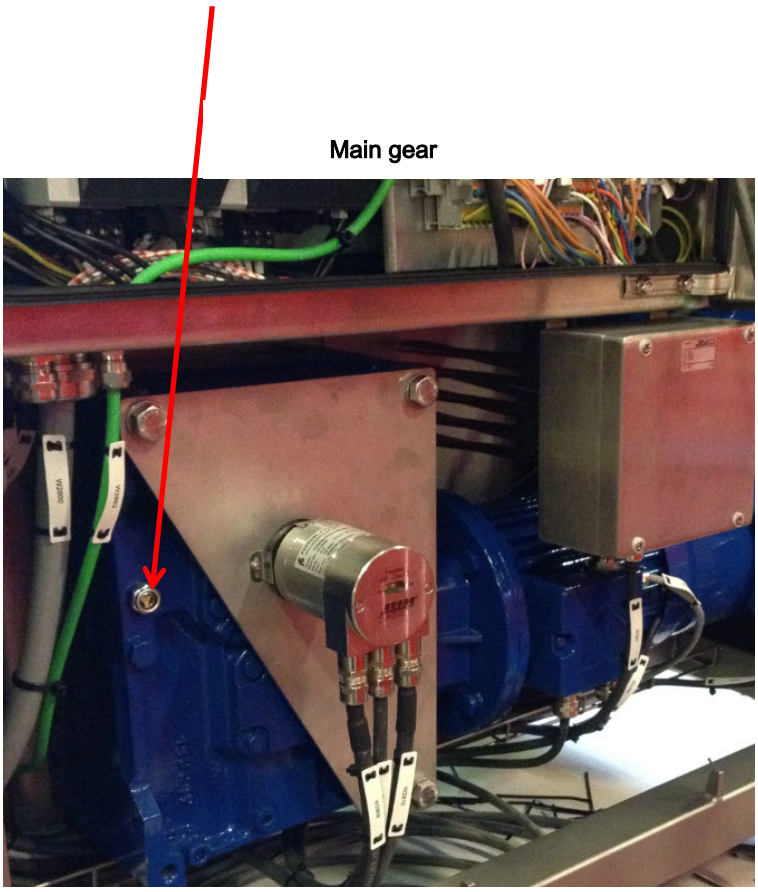

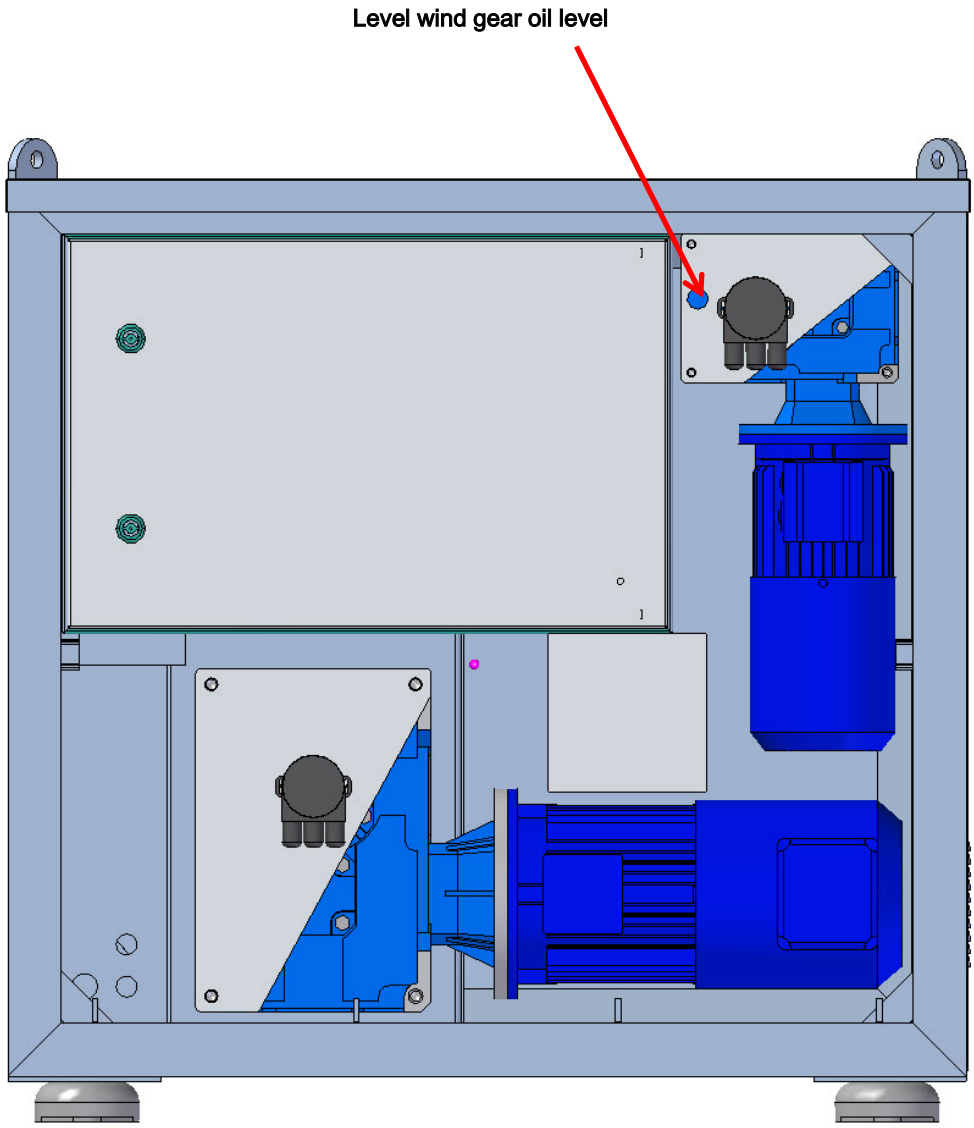
Level wind gear oil level

3.8.1.2 Replacement of gear oil

IMPORTANT

Only use prescribed oil type. Use the material safety sheet in order to handle the oil.

Prescribed gear oil type		
TOTAL	TOTAL Carter SH100	-20○C to +5○C
	TOTAL Carter SH150	+5○C to +40○C
	TOTAL Carter SH220	+20○C to +50○C

3.8.1.3 Grease point

The winch is equipped with a grease point for the level wind shown on the picture below, the location are marked with a circle.

Please follow the maintenance schedule to ensure a constant grease level. Afterwards each lubrication, check the surfaces for correct grease layer.

Prescribed grease type	
TOTAL	TOTAL CERAN WR2.

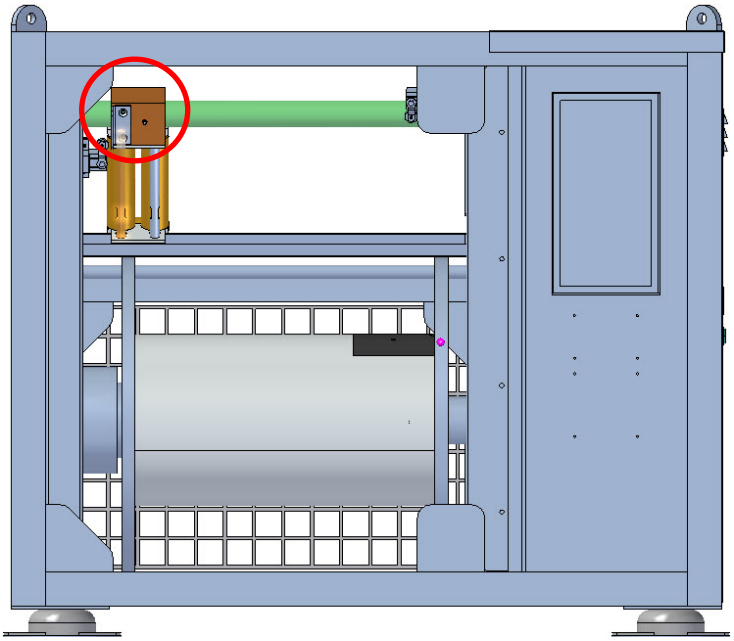

3.8.1.4 Check of brake systems

The brake system is designed to hold 1,5 x SWL.
In accordance with lifting equipment standard it has to be tested every 12 month. Use the guide below for testing the brake.

Stop the winch.
Add a load at 1,5 x SWL to the umbilical.
The winch should be able to hold the load for 5 minutes.
Remove the load from the umbilical.
If the test result is found ok, the winch is ready for use.

3.8.1.5 Brake resistor

Every year the brake resistor has to be controlled for correct resistance in elements and insulation from elements to ground. It is done by measuring the resistance with an ohmmeter. Always keep the brake resistor in clean condition.
The correct resistance value is printed on the side of the brake resistor.

IMPORTANT

Before measuring, the power to the winch has to be disconnected and secured against reconnection.

3.8.1.6 Disconnect wires

Wires from the frequency converter have to be disconnected on the resistor terminals.
Check ohmmeter
Check the ohmmeter measure 0Ω when the testing probes are hold together.
Resistance measurement
Measure the resistance, by placing the test probes in the resistor terminals.
Insulation test
Last step is insulation measurement. It is done by 1000V measured from terminal to ground.

System Number: H14130 - V42017_1																			
System Type: Winch Ocean Enviro 1,7																			
Maintenance Schedule																			
Check daily																			
▪ Oil level on gears																			
▪ Check for oil leaks in general																			
▪ Check the entire winch for unusual noises																			
▪ Check visually the complete winch																			
▪ Check if the level wind spindle and guide are greased.																			
Monthly or every 200 running hours whatever occurs first	Date	Date	Date	Date	Date	Date	Date	Date	Date	Date	Date	Date	Date	Date	Date	Date	Date	Date	Date
▪ Grease chain drive for level wind using a soft brush																			
▪ Function test of emergency stops																			
For every 6 month or 1000 running hours whatever occurs first	Date & Sign.					Date & Sign.					Date & Sign.					Date & Sign.			
(First service after 2 month or 300 running hours)																			
▪ Greasing as necessary																			
▪ Complete function test including emergency stops																			
Yearly or 2000 running hours whatever occurs first	Date & Sign.										Date & Sign.								
▪ Change oil in gears (first service must take place after 100 running hours)																			
▪ Check and tighten all bolts and nuts in electrical components																			
▪ Static brake test of disc brakes																			
▪ Check brakeresistance for contact resistance and shortcircuits in heating elements																			

System Number: H14130 - V42017_1																			
System Type: Winch Ocean Enviro 1,7																			
Maintenance Schedule																			
Check daily																			
▪ Oil level on gears																			
▪ Check for oil leaks in general																			
▪ Check the entire winch for unusual noises																			
▪ Check visually the complete winch																			
▪ Check if the level wind spindle and guide are greased.																			
Monthly or every 200 running hours whatever occurs first	Date	Date	Date	Date	Date	Date	Date	Date	Date	Date	Date	Date	Date	Date	Date	Date	Date	Date	Date
▪ Grease chain drive for level wind using a soft brush																			
▪ Function test of emergency stops																			
For every 6 month or 1000 running hours whatever occurs first	Date & Sign.					Date & Sign.					Date & Sign.					Date & Sign.			
(First service after 2 month or 300 running hours)																			
▪ Greasing as necessary																			
▪ Complete function test including emergency stops																			
Yearly or 2000 running hours whatever occurs first	Date & Sign.										Date & Sign.								
▪ Change oil in gears (first service must take place after 100 running hours)																			
▪ Check and tighten all bolts and nuts in electrical components																			
▪ Static brake test of disc brakes																			
▪ Check brakeresistance for contact resistance and shortcircuits in heating elements																			

3.9 ALARMS

3.9.1 List

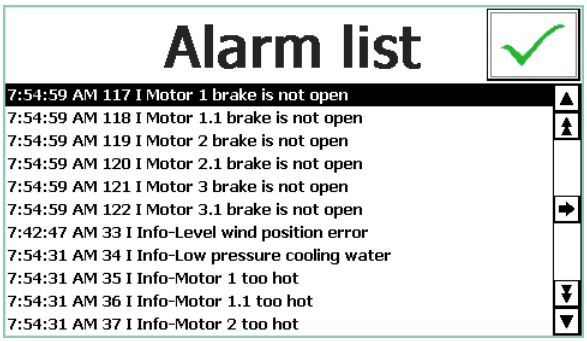

Alarms are shown on each page as one line banner at the top, except alarm pages.

Pressing the alarm button F3 opens the alarm list page with all existing alarms and warnings.

Alarms must be gone and acknowledged to leave the list. Warnings need no acknowledgement.

Alarms have numbers over 100, warnings below.

State of the alarms and warnings is indicated by letters: I=Incomming, A=Acknowledged, O=Outgoing. More than one letter can be combined.

Use the acknowledge button to acknowledge alarms.

Use left or right buttons to switch to saved alarms (alarm log) and help.

3.9.2 Saved alarms

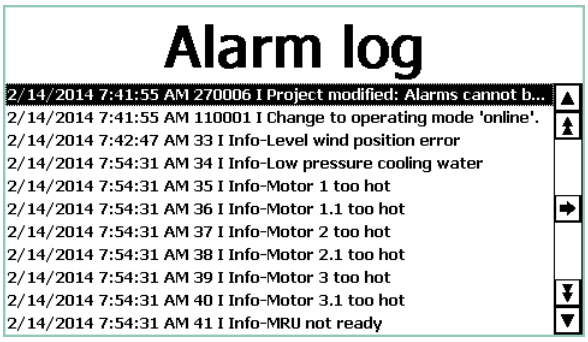

The alarm log shows saved alarms like the alarm list. No acknowledgement is possible. Each change of state is recorded.

Status are: I=Incomming, A=Acknowledged, O=Outgoing

Back to the alarm list using left or right button.

3.9.2.1 List of alarms

101	Drum encoder not counting	Errors
102	Emergency stop	Errors
103	Gear oil too hot too long	Errors
104	HPU oil too hot too long	Errors
105	Inverter 1 error	Errors
106	Inverter 2 error	Errors
107	Inverter 3 error	Errors
108	Inverter level wind error	Errors
109	Level wind brake is not open	Errors
110	Level wind encoder fault	Errors
111	Level wind thermistor	Errors
112	Low level gear oil	Errors
113	Low level HPU oil	Errors
114	Low pressure gear oil	Errors
115	Low pressure HPU	Errors
116	Alarm-116	Errors
117	Motor 1 brake is not open	Errors
118	Motor 1.1 brake is not open	Errors
119	Motor 2 brake is not open	Errors
120	Motor 2.1 brake is not open	Errors
121	Motor 3 brake is not open	Errors
122	Motor 3.1 brake is not open	Errors
123	Motor brakes are not all open	Errors
124	Motor brakes not all closed	Errors

125	Motor 1 thermistor	Errors
126	Motor 1.1 thermistor	Errors
127	Motor 2 thermistor	Errors
128	Motor 2.1 thermistor	Errors
129	Motor 3 thermistor	Errors
130	Motor 3.1 thermistor	Errors
131	Alarm-131	Errors
132	Torque different directions	Errors
133	Motor 1 brake is not closed	Errors
134	Motor 1.1 brake is not closed	Errors
135	Motor 2 brake is not closed	Errors
136	Motor 2.1 brake is not closed	Errors
137	Motor 3 brake is not closed	Errors
138	Motor 3.1 brake is not closed	Errors
139	Local I/O communication lost	Errors
140	Rack I/O communication lost	Errors
141	Inverter 1 not auto	Errors
142	Inverter 2 not auto	Errors
143	Inverter 3 not auto	Errors
144	Inverter level wind not auto	Errors
145	Alarm-145	Errors
146	Alarm-146	Errors
147	Alarm-147	Errors
148	Alarm-148	Errors

Some alarms are optional and not relevant for this winch.

3.9.2.2 Warnings

1	Info-Brake released manually	Warnings
2	Info-Breaker fan resistor	Warnings
3	Info-Breaker gear oil cooler	Warnings
4	Info-Breaker gear oil pump	Warnings
5	Info-Breaker heating gear oil	Warnings
6	Info-Breaker HPU	Warnings
7	Info-breaker inverter 1	Warnings
8	Info-breaker inverter 2	Warnings
9	Info-breaker inverter 3	Warnings
10	Info-Breaker level wind	Warnings
11	Info-Breaker level wind fan	Warnings
12	Info-Breaker motor 1 fan	Warnings
13	Info-Breaker motor 1.1 fan	Warnings
14	Info-Breaker motor 2 fan	Warnings
15	Info-Breaker motor 2.1 fan	Warnings
16	Info-Breaker motor 3 fan	Warnings
17	Info-Breaker motor 3.1 fan	Warnings
18	Info-Breaker phase relay	Warnings
19	Info-Breaker transformer 4T3	Warnings
20	Info-Breaker transformer 6T3	Warnings
21	Info-E. stop radio control	Warnings
22	Info-E. stop local box	Warnings
23	Info-E. stop main cabinet	Warnings
24	Info-E. stop manual box	Warnings
25	Info-E. stop remote box	Warnings
26	Info-Electric cabinet too hot	Warnings
27	Info-Hand over control wanted	Warnings
28	Info-High temperature gear oil	Warnings
29	Info-High temperature HPU	Warnings
30	Info-High temperature resistor	Warnings
31	Info-Level wind end switch	Warnings
32	Info-Level wind manual	Warnings
33	Info-Level wind position error	Warnings
34	Info-Low pressure cooling water	Warnings
35	Info-Motor 1 too hot	Warnings
36	Info-Motor 1.1 too hot	Warnings
37	Info-Motor 2 too hot	Warnings
38	Info-Motor 2.1 too hot	Warnings
39	Info-Motor 3 too hot	Warnings
40	Info-Motor 3.1 too hot	Warnings

41	Info-MRU not ready	Warnings
42	Info-Overload protection is active	Warnings
43	Info-Resistor hot - no pay out	Warnings
44	Info-Cable nearly all out	Warnings
45	Info-Motor temperature difference	Warnings
46	Info-maual operation	Warnings
47	Info-A frame comm. time out	Warnings
48	Info-forced out of low tension	Warnings
49	Info-spare49	Warnings
50	Info-Resistor warm	Warnings
51	Info-Low water pressure resistor - no	Warnings
52	Info-Thermal error circulation pump	Warnings
53	Spare-info 53	Warnings
54	Spare-info 54	Warnings
55	Spare-info 55	Warnings
56	Spare-info 56	Warnings
57	Spare-info 57	Warnings
58	Spare-info 58	Warnings
59	Spare-info 59	Warnings
60	Spare-info 60	Warnings
61	Spare-info 61	Warnings
62	Spare-info 62	Warnings
63	Spare-info 63	Warnings
64	Spare-info 64	Warnings
65	Spare-info 65	Warnings
66	Spare-info 66	Warnings
67	Spare-info 67	Warnings
68	Spare-info 68	Warnings
69	Spare-info 69	Warnings
70	Spare-info 70	Warnings
71	Spare-info 71	Warnings
72	Spare-info 72	Warnings
73	Spare-info 73	Warnings
74	Spare-info 74	Warnings
75	Spare-info 75	Warnings
76	Spare-info 76	Warnings
77	Spare-info 77	Warnings
78	Spare-info 78	Warnings
79	Spare-info 79	Warnings
80	Spare-info 80	Warnings

Some warnings are optional and not relevant for this winch.

3.10 DEMOBILIZE AND LONG TERM STORAGE

It is important to protect and secure the winch when not in use or during transport. This must be done in order to avoid dangerous situations where the pressure equipment and the electrical installation may pose a danger to personnel and materials. In addition, it is desired to achieve maximum service life and avoid/minimize operational and operating difficulties. In the following sections, it is described how the winch is best prepared to accrue and dismantling. It is necessary to follow the guide chronological starting with the electrical part in section 3.10.1

3.10.1 Electrical equipment

IMPORTANT

Make sure that the electrical power is switched off at the external power supply breaker. Removing the cables and disconnection of power must be carried out by a qualified person.
To make the reinstallation easier it is a recommendation to take pictures of the dismounting.

Guide to preservation

Dismount the supply cable.
- Protect cabinet and cables from water intrusion afterwards by sealing cable ends and feed through.

3.10.2 Mechanical equipment

When the electrical systems are disconnected, the preservation of the winch can begin.

IMPORTANT

1. **Surface treatment**
   - All non-greased raw surfaces of the winch must be protected by anti-corrosion agent (Tectyl).
2. **Grease**

Grease
- Greased surfaces like the level wind spindle and guides should be protected by a complete layer of grease and afterwards wrapped with plastic film.

If the winch is not used for a long time, it is important to fill up the gearbox with oil to prevent corrosion on the inside of the housing due to condensation. Use only the prescribed gear oil and remember to drain the oil to normal level before using it again.
It is recommended to cover the winch under a tarpaulin.

3.11 DISPOSAL

Disposal should be in accordance with local law. It is recommended to contact your local authorities if there should be any doubts. For specific information on used chemicals on the winch, see section 3.12 "Material safety data sheets”

3.12 MATERIAL SAFETY DATA SHEETS

PRODUCT LABELS

LABELLING (standard or EU):	Not concerned
R-phrases :	None
S-phrases :	None
TRANSPORT LABELLING:	Not applicable.

1. IDENTIFICATION OF THE SUBSTANCE/PREPARATION AND OF THE COMPANY UNDERTAKING

Name of the product :	CARTER SH 150
Code No. :	1KP
Product application :	Lubricant for gears
Supplier :	TOTAL UK LIMITED 40 Clarendon Road Watford. Hertfordshire. WD17 1TQ UNITED KINGDOM Tel: 01923 694000 Fax: 01923 694400 rm.gb-msds@total.co.uk
Contact :	Specific Product Related Info: 01977 636200
*Emergency telephones :	UK - 01923 694000
Poisons Advice Centre :	NHS Direct: 0845 46 47 / Textphone: 0845 606 46 47
Burns Units :	NHS Direct: 0845 46 47 / Textphone: 0845 606 46 47
See local details at end of sheet :	
Manufacturer :	TOTAL UK LIMITED 40 Clarendon Road Watford. Hertfordshire. WD17 1TQ UNITED KINGDOM Tel: 01923 694000 Fax: 01923 694400 rm.gb-msds@total.co.uk

2. HAZARDS IDENTIFICATION

Health effects :	This product does not present a danger of intoxication.
Environmental impact :	Do not discharge this product into the environment.
Physico-chemical hazards :	No specific risk of fire or explosion under normal conditions of use

3. COMPOSITION/INFORMATION ON INGREDIENTS

PREPARATION

Chemical nature : Product with a synthetic oil base

Substances presenting a health hazard	EC No.	CAS No.	Content	Symbol(s)	R-phrases
Long chain alkylamine			<0,2 %	T ,N	R-22, 23/24, 34, 43, 48/23, 50

See section 16 for explanations of R-phrases :

4. FIRST AID MEASURES

IN CASE OF SERIOUS OR PERSISTENT CONDITIONS, CALL A DOCTOR OR EMERGENCY MEDICAL CARE.

Inhalation :	Inhalation of heavy concentrations of vapour, fumes or spray, may cause mild irritation of the throat. Remove victim to fresh air and allow to rest.
Ingestion :	Give nothing to drink Do not induce vomiting to avoid the risk of aspiration into the respiratory tract. Possible risk of vomiting and diarrhoea.
Skin contact :	Immediately remove all soiled or stained clothing. Wash the affected area immediately and repeatedly with soap and water.
Eye contact :	Keep eyes open and rinse immediately and repeatedly with water for at least 15 minutes.
Aspiration :	If the product is believed to have entered the lungs (in case of vomiting, for example), take the person to hospital for immediate care.

5. FIRE FIGHTING MEASURES

See heading 9

Extinguishing media :	- suitable: Foam, carbon dioxide (CO2), powder. - not recommended: Do not use water jets (stick jets) for extinguishing fire, as this may help the spread of flames.
Specific hazards :	Incomplete combustion and thermolysis may produce gases of varying toxicity such as carbon monoxide, carbon dioxide, various hydrocarbons, sulpher oxides, aldehydes etc., and soot. These are highly dangerous if inhaled. Vapours can build explosive mixtures with air. Vapours are heavier than air and may spread on the ground to sources of ignition.
Protective measures for firefighters :	Insulated breathing apparatus must be worn in confined premises with heavy concentrations of fumes and gases.
Other :	All combustion residues and contaminated water from fire-fighting should be disposed of according to local regulations.

6. ACCIDENTAL RELEASE MEASURES

See sections 8 and 13.

Personal protection :	Ensure good ventilation. Remove sources of ignition. Do not smoke.
After spillage / leakage :	- On land: Surfaces on which the product has been spilled may become slippery. Do not allow the product to enter sewers or rivers or contaminate the soil. Recover with mechanical means such as pumps and skimmers. Contain and collect the spilled product with sand or any other inert absorbant material. - On water: Floating absorbant material, then mechanical recovery. If the product is spilt into rivers or sewers, notify the authorities of the possible presence of surface effluent.

7. HANDLING AND STORAGE

HANDLING :

Prevention of user exposure :	Ventilate extensively if the formation of vapours, fumes, mists or aerosol is a risk. Make all the necessary arrangements in order to reduce exposure risk, notably to products in use or to wastes. Keep away from combustible substances; keep away from food and beverages.
Prevention of fire and explosion :	Empty containers may contain flammable or explosive vapours. There is a fire hazard associated with rags, paper or any other material used to remove spills which become soaked with product. Avoid accumulation of these: they are to be disposed off safely after use. Handle away from any source of ignition and heat.
Precautions :	Avoid static electricity build up with connection to earth. Set up machinery and equipment so as to avoid the risk of accidental spills or splashes onto hot machine parts and electrical contacts (on joint failure, for example).
STORAGE :	
Technical measures :	Make the necessary arrangements to prevent water and soil pollution.
Storage precautions :	Store at ambient temperature, protected against contact with water and moisture, and away from any source of ignition. Keep containers closed when not in use - To be avoided: Do not store exposed to the elements.
Incompatible products :	A dangerous reaction may occur with strong oxidizing agents.
Packaging materials :	- Recommended: Use only hydrocarbon-resistant containers, joints, pipes, etc. Keep in original container if possible. Otherwise, transfer all indications on the regulatory label to the new container.

8. EXPOSURE CONTROLS/PERSONAL PROTECTION

Technical measures :	Use the product in a properly ventilated atmosphere. When working on enclosed place (tanks, reservoirs...), make sure that atmosphere is not suffocating and/or wear recommended equipment.
Respiratory protection :	In case of vapours or sprays formation: Combined gas cartridge (organic gases and dust, filter A/P2).
Hand protection :	Impermeable hydrocarbon-proof gloves. recommended material: nitrile , neoprene. The break through times of the same type of glove of different manufacturers can be very different - even if the layer thickness is similar. Therefore the break through times have to be found out from the manufacturer of the protective gloves themselves. The demands on the gloves are determined by the conditions in practice (e.g. multiple use, mechanical load, temperature, strength and duration of exposition). Before choosing suitable gloves, it is recommended that the user tests the gloves.
Eye protection :	Goggles, in case of risk of splashing.
Skin and body (other than the hands) protection :	Depending on the requirements, face mask, boots, product resistant clothing, safety shoes (drum handling). Don't wear rings, watches or anything similar which can retain the product and may give rise to skin conditions.

Hygienic work practices :	Avoid prolonged and repeated contact with the skin, especially with used or waste product If the product comes into contact with the skin, wash the affected area immediately and copiously with soap and water. Do not use abrasives, solvents or fuels. Immediately remove all soiled or stained clothing. Do not dry hands with rags that have been contaminated with product. Do not put product contaminated rags into workwear pockets. Do not eat, drink or smoke whilst handling the product.

9. PHYSICAL AND CHEMICAL PROPERTIES

Appearance :	Liquid
Colour :	Yellow to amber.
Odour :	Characteristic
Density/specific gravity :	850 - 860 kg/m3 Temperature (°C) 15
Flash point :	> 200 °C OC (Open cup).
Température d'auto-inflammation :	> 250 °C (ASTM E 659)
Comments on autoignition temperature :	This temperature may be significantly lower under particular conditions (slow oxidation on finely divided materials...).
Solubility :	- in water : Insoluble and immiscible. - in organic solvents : Soluble in many common solvents.
Partition coefficient (log Pow) :	Log Pow > 6 Temperature (°C) 20
Viscosity :	150 mm2/s Temperature (°C) 40

10. STABILITY AND REACTIVITY

Stability :	The product is stable at normal storage, handling and use temperatures.
Conditions to avoid :	Heat (temperatures above flash point), sparks, ignition points, flames, static electricity
Materials to avoid :	Avoid contact with strong oxidizers
Hazardous decomp. products :	Incomplete combustion and thermolysis produces potentially toxic gases such as carbon monoxide, carbon dioxide, various hydrocarbons, aldehydes and soot.

11. TOXICOLOGICAL INFORMATION

Acute toxicity / Local effect :

Inhalation, comments:	Not classified according to the criteria of classification in force. Inhalation of high concentrations of vapour or aerosols may cause irritation of the upper respiratory tract.
Skin contact, comments:	Not classified according to the criteria of classification in force.
Ingestion, comments:	In case of ingestion of small quantities, no important effect observed. in case of ingestion of larger amounts: abdominal pain, diarrhea, ...

CHRONIC TOXICITY OR LONG-TERM TOXICITY :

Skin contact :	Characteristic skin affections (oil blisters) may develop following prolonged and repeated exposure through contact with stained clothing
Sensitization :	Contains a sensitising substance May cause sensitisation by skin contact

12. ECOLOGICAL INFORMATION

Comments about ecotoxicity :	Experimental data on the finished product are not available. It is considered to present a little danger for aquatic life. no information available for used product
Mobility :	- Air: there is a slow loss by evaporation. - Soil: Given its physical and chemical characteristics, the product generally shows little mobility in the ground. - Water: The product is insoluble; it spreads on the surface of the water
Persistence and degradability :	No experimental information about the finished product. However the "synthetic oil" fraction of the product is intrinsically biodegradable. Some components of the product may not be biodegradable.

13. DISPOSAL CONSIDERATIONS

Waste disposal :	Dispose of in a safe manner, in accordance with local regulations. If need be, collection by an authorised waste contractor and regeneration or incineration at an approved installation.
Waste class :	The waste classification is dependant on the composition of the product at the time of disposal. The waste classification mentioned here represents only a recommendation. The waste producer is responsible for the correct specification of the waste. The specification of the waste classification should be in arrangement with the authorised waste disposal company. Industrial waste number EU 13 02 06
Disposal of contaminated packaging :	Proceed in compliance with the prevailing regulations.

14. TRANSPORT INFORMATION

UN N°: not applicable

Road (ADR) / Rail (RID) :

Class : Not restricted for transport.

Transport by barge (ADNR) :

Marine (IMO-IMDG) :

Air (ICAO/IATA) :

15. REGULATORY INFORMATION

Not applicable

Risk phrases :	None
Safety phrases :	None

EU directives :	Hazardous preparations directive 1999/45/EC modified (Directive 2001/60/EC). This product fulfills the requirements of the European directives : 76/769/EEC 2000/53/EC 2002/95/EC 2002/96/EC 2003/11/EC

16. OTHER INFORMATION

HSE Infoline: 08701 545500 / Minicom: 02920 808537
This sheet is in compliance with the standards defined by the directives 91/155/CEE, 93/112/CEE, 2001/58/CE and the article 14 of the directive 1999/45/EC.

Explanations of R-phrases in section 2 :	R-22 Harmful if swallowed. R-23/24 Toxic by inhalation and in contact with skin. R-34 Causes burns. R-43 May cause sensitization by skin contact. R-48/23 Toxic: danger of serious damage to health by prolonged exposure through inhalation. R-50 Very toxic to aquatic organisms.
*Revision date:	2008-10-01
*Supersedes the data sheet of:	2004-09-30

* Information revised since the previous version of the SDS :

SDS No. :	LT-DS-5352
*Safety Data Sheet status :	Approved.

This safety data sheet serves to complete but not to replace the technical product sheets. The information contained herein is given in good faith and is accurate to the best of knowledge at the date indicated above.It is understood by the user that any use of the product for purposes other than those for which it was designed entails potential risk.The information given herein in no way dispenses the user from knowing and applying all provisions regulating his activity.The user bears sole liability for the precautions required when using the product.The regulatory texts indicated herein are intended to aid the user to fulfil his obligations. This list is not to be considered complete and exhaustive.It is the user's responsibility to ensure that he is subject to no other obligations than those mentioned.

MATERIAL SAFETY DATA SHEET

according to Regulation (EC) No. 1907/2006

SDS # : 31521

CERAN WR 2

Date of the previous version: 2012-02-22 **Revision Date:** 2013-01-21 **Version** 1.01

1. IDENTIFICATION OF THE SUBSTANCE/MIXTURE AND OF THE COMPANY/UNDERTAKING

1.1. Product identifier

Product name	**CERAN WR 2**
Number	H52
Pure substance/mixture	Mixture

1.2. Relevant identified uses of the substance or mixture and uses advised against

Identified uses	Lubricating grease.

1.3. Details of the supplier of the safety data sheet

Supplier	TOTAL LUBRIFIANTS 562 Avenue du Parc de L'ile 92029 Nanterre Cedex Tél: +33 (0)1 41 35 40 00 Fax: +33 (0)1 41 35 84 71

For further information, please contact:

Contact Point	HSE
E-mail Address	rm.msds-lubs@total.com

1.4. Emergency telephone number

+33 1 49 00 00 49 (24h/24, 7d/7)
France - ORFILA (INRS) Tél : +33 (0)1 45 42 59 59
In France : - PARIS : Hôpital Fernand Widal 200, rue du Faubourg Saint-Denis 75475 Paris Cédex 10 , Tel : 01.40.05.48.48. - MARSEILLE : Hopital Salvator, 249 bd Ste Marguerite 13274 Marseille cedex 5, Tel : 04.91.75.25.25. - LYON : Hopital Edouard Herriot, 5 place d'Arsonvol, 69437 Lyon cedex 3, Tel : 04.72.11.69.11. - NANCY : Hopital central, 29 Av du Mal De Lattre de Tassigny, 54000 Nancy, Tel : 03.83.32.36.36 ou le SAMU : Tel (15)

2. HAZARDS IDENTIFICATION

2.1. Classification of the substance or mixture

REGULATION (EC) No 1272/2008
For the full text of the H-Statements mentioned in this Section, see Section 2.2.

Classification

DIRECTIVE 67/548/EEC or 1999/45/EC
For the full text of the R-phrases mentioned in this Section, see Section 16

SDS # : 31521

CERAN WR 2

Revision Date: 2013-01-21 **Version** 1.01

Not a hazardous substance or preparation according to EC-directives 67/548/EEC or 1999/45/EC
Symbol(s)
Not Classified***

2.2. Label elements

Labelled according to Not classified/No labelling required

R-phrase(s)
none***

S-phrase(s)
none***

2.3. Other hazards

Physical-Chemical Properties Contaminated surfaces will be extremely slippery.

Environmental properties Should not be released into the environment.

3. COMPOSITION/INFORMATION ON INGREDIENTS

3.2. Mixture

Chemical Name	EC-No	REACH registration No	CAS-No	Weight %	Classification (Dir. 67/548)	Classification (Reg. 1272/2008)
Benzenesulfonic acid, C10-16-alkyl derivs., calcium salts***	271-529-4***	no data available	68584-23-6	<5	Xi;R36	Eye Irrit. 2 (H319)
Sulfonic acids, petroleum, calcium salt***	263-093-9***	no data available	61789-86-4	<2.5	Xi;R36***	Eye Irrit. 2 (H319)***
Benzenesulfonic acid, mono-C16-24-alkyl derivs., calcium salts***	274-263-7***	no data available	70024-69-0	<2.5	Xi;R36	Eye Irrit. 2 (H319)

Additional information Product containing mineral oil with less than 3% DMSO extract as measured by IP 346

For the full text of the R-phrases mentioned in this Section, see Section 16
For the full text of the H-Statements mentioned in this Section, see Section 16.

4. FIRST AID MEASURES

4.1. Description of first-aid measures

SDS # : 31521

CERAN WR 2

Revision Date: 2013-01-21 **Version** 1.01

General advice	IN CASE OF SERIOUS OR PERSISTENT CONDITIONS, CALL A DOCTOR OR EMERGENCY MEDICAL CARE.
Eye contact	Rinse thoroughly with plenty of water, also under the eyelids.
Skin contact	Remove contaminated clothing and shoes. Wash skin with soap and water. Wash contaminated clothing before reuse. High pressure jets may cause skin damage. Take victim immediately to hospital.
Inhalation	Move to fresh air.
Ingestion	Do NOT induce vomiting. Never give anything by mouth to an unconscious person. Call a physician or Poison Control Center immediately.

4.2. Most important symptoms and effects, both acute and delayed

Eye contact	Not classified.
Skin contact	Not classified. High pressure injection of the products under the skin may have very serious consequences even though no symptom or injury may be apparent.
Inhalation	Not classified. Inhalation of vapors in high concentration may cause irritation of respiratory system.
Ingestion	Not classified. Ingestion may cause gastrointestinal irritation, nausea, vomiting and diarrhea.

4.3. Indication of immediate medical attention and special treatment needed, if necessary

Notes to physician	Treat symptomatically.

5. FIRE-FIGHTING MEASURES

5.1. Extinguishing media

Suitable Extinguishing Media	Carbon dioxide (CO_2). ABC powder. Foam. Water spray or fog.
Unsuitable Extinguishing Media	Do not use a solid water stream as it may scatter and spread fire.

5.2. Special hazards arising from the substance or mixture

Special Hazard	Incomplete combustion and thermolysis may produce gases of varying toxicity such as carbon monoxide, carbon dioxide, various hydrocarbons, aldehydes and soot. These may be highly dangerous if inhaled in confined spaces or at high concentration.

5.3. Advice for fire-fighters

SDS # : 31521

CERAN WR 2

Revision Date: 2013-01-21 **Version** 1.01

Special protective equipment for fire-fighters	Wear self-contained breathing apparatus and protective suit.
Other information	Cool containers / tanks with water spray. Fire residues and contaminated fire extinguishing water must be disposed of in accordance with local regulations.

6. ACCIDENTAL RELEASE MEASURES

6.1. Personal precautions, protective equipment and emergency procedures

General Information	Do not touch or walk through spilled material. Contaminated surfaces will be extremely slippery. Use personal protective equipment. Ensure adequate ventilation. Remove all sources of ignition.

6.2. Environmental precautions

General Information	Do not allow material to contaminate ground water system. Try to prevent the material from entering drains or water courses. Local authorities should be advised if significant spillages cannot be contained.

6.3. Methods and materials for containment and cleaning up

Methods for cleaning up	Dam up. Contain spillage, and then collect with non-combustible absorbent material, (e.g. sand, earth, diatomaceous earth, vermiculite) and place in container for disposal according to local / national regulations (see section 13). Collect free product with suitable mechanical means. Keep in suitable, closed containers for disposal.

6.4. Reference to other sections

Personal Protective Equipment	See Section 8 for more detail.
Waste treatment	See section 13.

7. HANDLING AND STORAGE

7.1. Precautions for safe handling

Advice on safe handling	When using, do not eat, drink or smoke. For personal protection see section 8. Use only in well-ventilated areas. Do not breathe vapors or spray mist. Avoid contact with skin, eyes and clothing.
Prevention of fire and explosion	Take precautionary measures against static discharges. Ground/bond containers, tanks and transfer/receiving equipment.

SDS # : 31521

CERAN WR 2

Revision Date: 2013-01-21 **Version** 1.01

Hygiene measures Ensure the application of strict rules of hygiene by the personnel exposed to the risk of contact with the product. Regular cleaning of equipment, work area and clothing is recommended. Wash hands before breaks and immediately after handling the product. Do not use abrasives, solvents or fuels. Do not dry hands with rags that have been contaminated with product. Do not put product contaminated rags into workwear pockets.

7.2. Conditions for safe storage, including any incompatibilities

Technical measures/Storage conditions Keep away from food, drink and animal feedingstuffs. Keep in a bunded area. Keep container tightly closed. Keep preferably in the original container. Otherwise reproduce all indication of the regulation label on the new container. Do not remove the hazard labels of the containers (even if they are empty). Design the installations in order to avoid accidental emissions of product (due to seal breakage, for example) onto hot casings or electrical contacts. Protect from frost, heat and sunlight. Protect from moisture.

Materials to Avoid Strong oxidizing agents.

7.3. Specific end uses

8. EXPOSURE CONTROLS/PERSONAL PROTECTION

8.1. Control parameters

Exposure limits oil mist : 10mg/m³, for 15 minutes
oil mist : 5mg/m³, for 8 hours

Legend See section 16

DNEL Worker (Industrial/Professional)***

Chemical Name	Short term, systemic effects	Short term, local effects	Long term, systemic effects	Long term, local effects
Benzenesulfonic acid, C10-16-alkyl derivs., calcium salts*** 68584-23-6			3.33 mg/kg bw/day (dermal) 0.66 mg/m³ (inhalation)	

DNEL Consumer***

Chemical Name	Short term, systemic effects	Short term, local effects	Long term, systemic effects	Long term, local effects
Benzenesulfonic acid, C10-16-alkyl derivs., calcium salts*** 68584-23-6			1.667 mg/kg bw/day (dermal) 0.33 mg/m³ (inhalation 0.8333 mg/kg bw/day (oral)	

Predicted No Effect Concentration (PNEC) ***

Chemical Name	Water	Sediment	Soil	Air	STP	Oral

SDS # : 31521

CERAN WR 2

Revision Date: 2013-01-21 **Version** 1.01

Benzenesulfonic acid, C10-16-alkyl derivs., calcium salts*** 68584-23-6	1 mg/l fw 1 mg/l mw 10 mg/l or	723500000 mg/kg dw fw 723500000 mg/kg dw mw	868700000 mg/kg dw		100 mg/l	16.667 mg/kg food

8.2. Exposure controls

Occupational Exposure Controls

Engineering Measures Apply technical measures to comply with the occupational exposure limits. When working in confined spaces (tanks, containers, etc.), ensure that there is a supply of air suitable for breathing and wear the recommended equipment.

Personal Protective Equipment

General Information If the product is used in mixtures, it is recommended that you contact the appropriate protective equipment suppliers. These recommendations apply to the product as supplied.

Respiratory protection None under normal use conditions. When workers are facing concentrations above the exposure limit they must use appropriate certified respirators. Respirator with combination filter for vapour/particulate (EN 14387). The use of breathing apparatus must comply strictly with the manufacturer's instructions and the regulations governing their choices and uses.

Eye Protection If splashes are likely to occur, wear:. Safety glasses with side-shields.

Skin and body protection Wear suitable protective clothing. Protective shoes or boots. Long sleeved clothing.

Hand Protection Hydrocarbon-proof gloves: Fluorinated rubber, Nitrile rubber. Please observe the instructions regarding permeability and breakthrough time which are provided by the supplier of the gloves. Also take into consideration the specific local conditions under which the product is used, such as the danger of cuts, abrasion. If used in solution, or mixed with other substances, and under conditions which differ from EN 374, contact the supplier of the EC approved gloves.

Environmental exposure controls

General Information The product should not be allowed to enter drains, water courses or the soil.

9. PHYSICAL AND CHEMICAL PROPERTIES

9.1. Information on basic physical and chemical properties

Color beige
Physical State @20°C solid
Odor Characteristic

Property	Values	Remarks	Method
pH		Not applicable	

SDS # : 31521

CERAN WR 2

Revision Date: 2013-01-21 **Version** 1.01

Boiling point/boiling range		Not applicable	
Flash point	**> 200 °C**		
	> 392 °F		.
Evaporation rate		No information available	
Flammability Limits in Air		No information available	
Vapor Pressure		No information available	
Vapor density		No information available	
Density	~ 900 kg/m³	@ 20 °C	
Water solubility		Insoluble	
Solubility in other solvents		No information available	
logPow		No information available	
Autoignition temperature	**> 250 °C**		ASTM E659
	> 482 °F		ASTM E659
Viscosity, kinematic		No information available	
Explosive properties	Not explosive		
Oxidizing Properties	Not applicable		
Possibility of hazardous reactions	Not applicable		

9.2. Other information

10. STABILITY AND REACTIVITY

10.1. Reactivity

10.2. Chemical stability

Stability Stable under recommended storage conditions.

10.3. Possibility of hazardous reactions

Hazardous Reactions None under normal processing.

10.4. Conditions to Avoid

Conditions to Avoid Heat (temperatures above flash point), sparks, ignition points, flames, static electricity.

10.5. Incompatible Materials

Materials to Avoid Strong oxidizing agents.

10.6. Hazardous Decomposition Products

Hazardous Decomposition Products None under normal use. Incomplete combustion and thermolysis may produce gases of varying toxicity such as carbon monoxide, carbon dioxide, various hydrocarbons, aldehydes and soot.

11. TOXICOLOGICAL INFORMATION

SDS # : 31521

CERAN WR 2

Revision Date: 2013-01-21 **Version** 1.01

11.1. Information on toxicological effects

Acute toxicity Local effects Product Information

Skin contact . Not classified. High pressure injection of the products under the skin may have very serious consequences even though no symptom or injury may be apparent.

Eye contact . Not classified.

Inhalation . Not classified. Inhalation of vapors in high concentration may cause irritation of respiratory system.

Ingestion . Not classified. Ingestion may cause gastrointestinal irritation, nausea, vomiting and diarrhea.

Acute toxicity - Component Information

Chemical Name	LD50 Oral	LD50 Dermal	LC50 Inhalation
Benzenesulfonic acid, C10-16-alkyl derivs., calcium salts***	> 5000 mg/kg (Rat - OECD 401)	> 5000 mg/kg bw (rabbit - OECD 402)	> 1.9 mg/l (Rat - aerosol-OECD 403)
Sulfonic acids, petroleum, calcium salt***	> 5000 mg/kg (Rat)***	> 4000 mg/kg (Rabbit)***	

Sensitization

Sensitization Not classified as a sensitizer.

Specific effects

Carcinogenicity This product is not classified carcinogenic.
Mutagenicity This product is not classified as mutagenic.
Reproductive toxicity This product does not present any known or suspected reproductive hazards.

Repeated Dose Toxicity

Subchronic toxicity No information available.

Target Organ Effects (STOT)

Target Organ Effects (STOT) No information available.

Other information

Other adverse effects Characteristic skin lesions (pimples) may develop following prolonged and repeated exposures (contact with contaminated clothing).

12. ECOLOGICAL INFORMATION

12.1. Toxicity

SDS # : 31521

CERAN WR 2

Revision Date: 2013-01-21 **Version** 1.01

Not classified.

Acute aquatic toxicity - Product Information
No information available.

Acute aquatic toxicity - Component Information

Chemical Name	Toxicity to algae	Toxicity to daphnia and other aquatic invertebrates	Toxicity to fish	Toxicity to microorganisms
Benzenesulfonic acid, C10-16-alkyl derivs., calcium salts*** 68584-23-6	EL50 (72h) >1000 mg/l Pseudokirchneriella subcapitata	EL50 (48h) > 1000 mg/l daphnia magna	LL50(96h) > 10000 mg/l Cyprinodon variegatus (OECD 203)	
Sulfonic acids, petroleum, calcium salt*** 61789-86-4		EC50 (48h) > 100 mg/l Daphnia magna (OECD 202)***	LC50 (96h) > 10000 mg/l Cyprinodon variegatus (OECD 203)***	

Chronic aquatic toxicity • Product Information
No information available.

Chronic aquatic toxicity - Component Information
No information available.

Effects on terrestrial organisms
No information available.

12.2. Persistence and degradability

General Information
No information available.

12.3. Bioaccumulative potential

Product Information No information available.

logPow No information available
Component Information .

12.4. Mobility in soil

Soil Given its physical and chemical characteristics, the product has no soil mobility.

Air Loss by evaporation is limited.

Water The product is insoluble and floats on water.

12.5. Results of PBT and vPvB assessment

PBT and vPvB assessment No information available.

SDS # : 31521

CERAN WR 2

Revision Date: 2013-01-21 **Version** 1.01

12.6. Other adverse effects

General Information No information available.

13. DISPOSAL CONSIDERATIONS

13.1. Waste treatment methods

Waste from Residues / Unused Products Should not be released into the environment. Dispose of in accordance with the European Directives on waste and hazardous waste. Dispose of in accordance with local regulations.

Contaminated packaging Empty containers should be taken to an approved waste handling site for recycling or disposal.

EWC Waste Disposal No. The following Waste Codes are only suggestions:. 12 01 12. According to the European Waste Catalogue, Waste Codes are not product specific, but application specific. Waste codes should be assigned by the user based on the application for which the product was used.

14. TRANSPORT INFORMATION

ADR/RID Not regulated

IMDG/IMO Not regulated

ICAO/IATA Not regulated

ADN Not regulated

15. REGULATORY INFORMATION

15.1. Safety, health and environmental regulations/legislation specific for the substance or mixture

European Union

International Inventories

EINECS/ELINCS	-
TSCA	-
DSL	-
ENCS	-

SDS # : 31521

CERAN WR 2

Revision Date: 2013-01-21 **Version** 1.01

IECSC	-
KECL	-
PICCS	-
AICS	-
NZIoC	-

Legend

EINECS/ELINCS - European Inventory of Existing Commercial Chemical Substances/EU List of Notified Chemical Substances
TSCA - United States Toxic Substances Control Act Section 8(b) Inventory
DSL/NDSL - Canadian Domestic Substances List/Non-Domestic Substances List
ENCS - Japan Existing and New Chemical Substances
IECSC - China Inventory of Existing Chemical Substances
KECL - Korean Existing and Evaluated Chemical Substances
PICCS - Philippines Inventory of Chemicals and Chemical Substances
AICS - Australian Inventory of Chemical Substances
NZIoC - New Zealand Inventory of Chemicals

Further information

15.2. Chemical Safety Assessment

Chemical Safety Assessment No information available

16. OTHER INFORMATION

Full text of R-phrases referred to under sections 2 and 3
R36 - Irritating to eyes***

Full text of H-Statements referred to under sections 2 and 3
H319 - Causes serious eye irritation***

Abbreviations, acronyms

Legend Section 8

+	Sensitizer	*	Skin designation
**	Hazard Designation	C:	Carcinogen
M:	Mutagen	R:	Toxic to reproduction

Revision Date: 2013-01-21
Revision Note *** Indicates updated section.
This safety data sheet complies with the requirements of Regulation (EC) No. 1907/2006

This safety data sheet serves to complete but not to replace the technical product sheets. The information contained herein is given in good faith and is accurate to the best of knowledge at the date indicated above.It is understood by the user that any use of the product for purposes other than those for which it was designed entails potential risk.The information given herein in no way dispenses the user from knowing and applying all provisions regulating his activity.The user bears sole liability for the precautions required when using the product.The regulatory texts indicated herein are intended to aid the user to fulfil his obligations. This list is not to be considered complete and exhaustive.It is the user's responsibility to ensure that he is subject to no other obligations than those mentioned.

SDS # : 31521

CERAN WR 2

Revision Date: 2013-01-21 **Version** 1.01

End of the safety data sheet